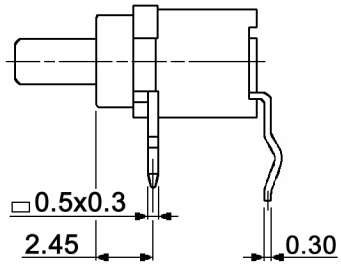

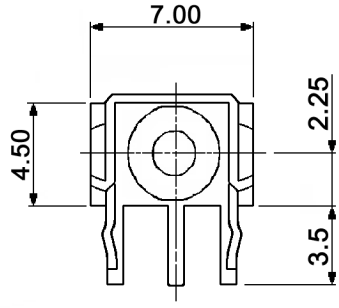

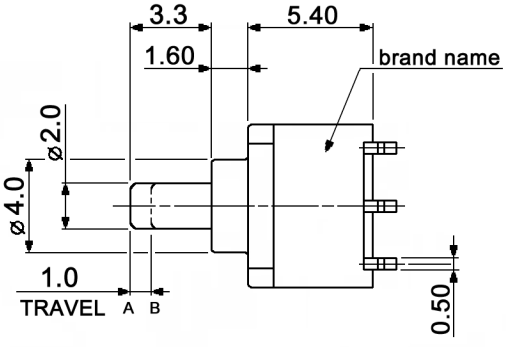

P.C. LAYOUT

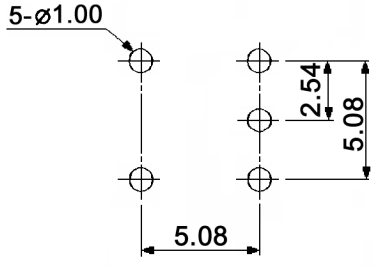

CIRCUIT DIAGRAM
(BOTTOM VIEW)

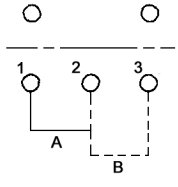

Plastic caps:

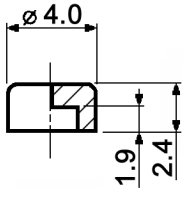

black	KF 4105
grey	KF 4107
red	KF 4109
white	KF 4110

Specifications:

Contact rating:	max.: 0.4VA, 28V DC min.: 1µA, 20mV DC
Contact resistance:	100mOhm max.
Insulation resistance:	500MOhm min. at 250V DC
Operating temperature:	-40°C to +85°C
Storage temperature:	-40°C to +85°C
Mechanical life:	min. 30 000 cycles
Soldering conditions:	auto-soldering: max.: 250 +/-5°C, 7sec. max.: 270 +/-5°C, 5sec.
Mounting:	on pc-board
ESD resistance:	8kV min. (between actuator and terminals)
Switching function:	on - mom

Washable by water or alcohol-based cleaners

Material:	Contacts: phosphor bronze, gold plated Terminals: PC terminals, crimped, phosphor bronze, gold plated Case / actuator: PES, UL94V-0, washable

Compliance: RohS II (2011/65/EU)

Tolerances: up to 10: ±0.2mm above 10-50: ±0.3mm			Date	Name	FP 1 F-RA
			01/09	dr	
Washable	07/14	dr	knitter-switch	20 25 70	Page
Circuit diagram	11/11	dr			1/1
Temperatures	04/11	dr			
Modifications	Date	Name			